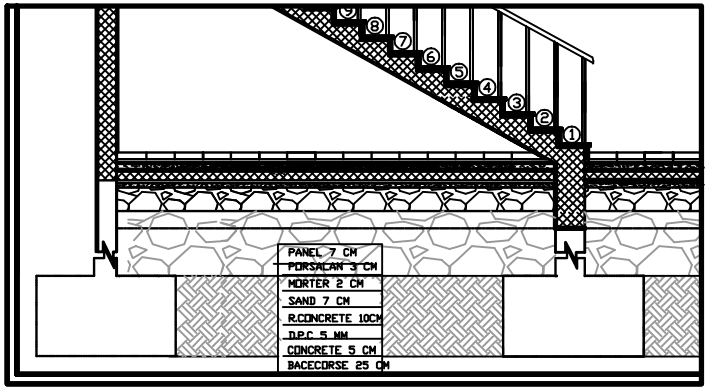

Details of concrete stairs

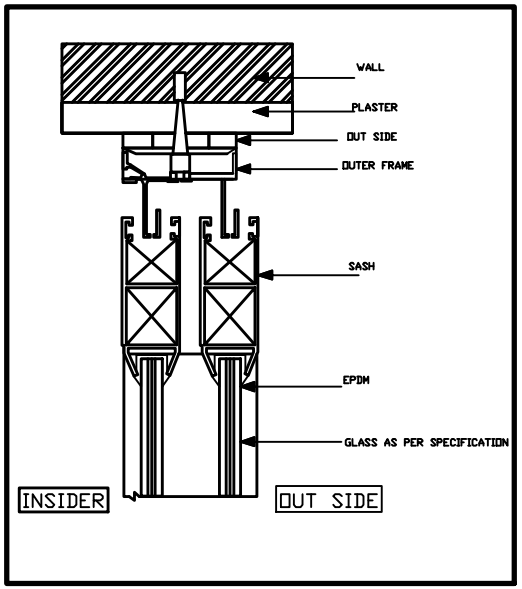

Details of Aluminum Window

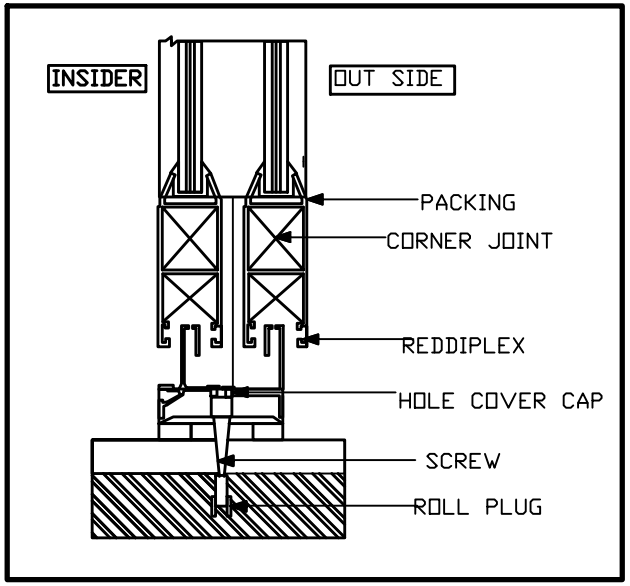

Details of Aluminum Window

PALESTINE POLYTECHNIC UNIVERSITY
COLLAGE OF ENGINEERING
ARCHITECTURAL ENGINEERING

GRADUATION PROJECT

PALESTINE AQUARIUM

SUPERVISOR:

DR. FAIR A.TAWATHA

DONE BY:

HANEEN ISSA ABI



DETAILS
SCALE: 1-25

